How to build a terrace in the garden?

1 Create a permeable foundation layer with plastic honeycomb grids.

1 Delimitation of the area.

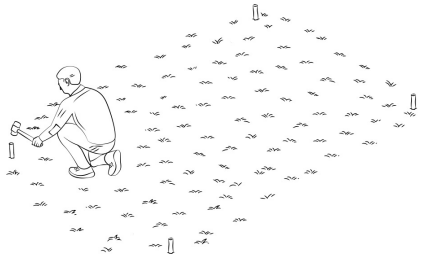

2 Depth determination and excavation.

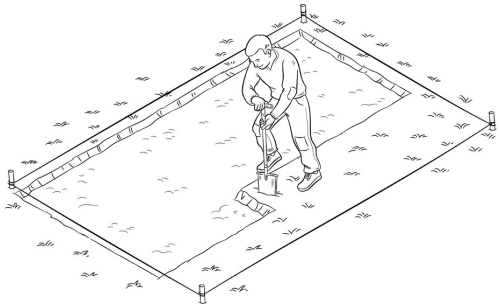

3 Laying the foundation.

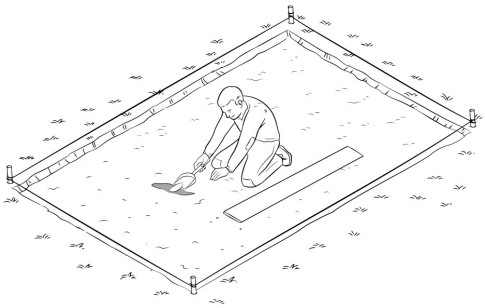

4 Application and spreading the crushed stone.

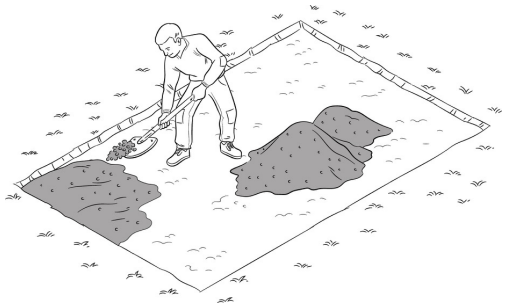

5 Careful levelling of the crushed stone.

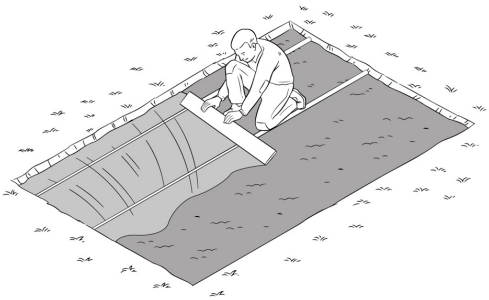

6 Installation of plastic grids and filling them with crushed stone.

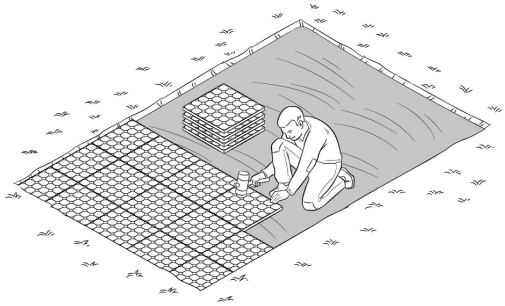

2 Lay WARCO tiles on the plastic honeycomb grids.

1 Place the first terrace tile in the centre.

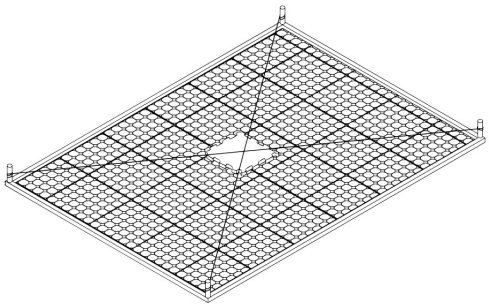

2 Lay the central rows. Check the laying pattern.

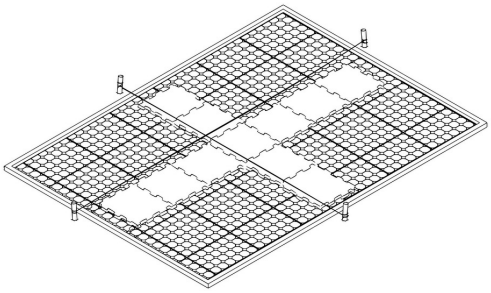

3 Cover the surface with whole tiles.

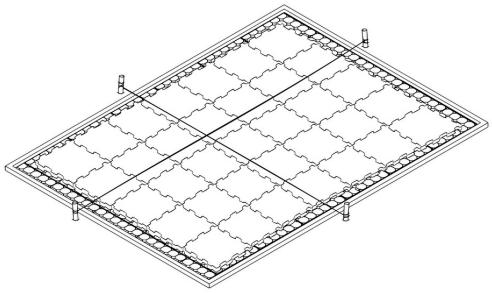

4 Cut the tiles for edges with a saw.

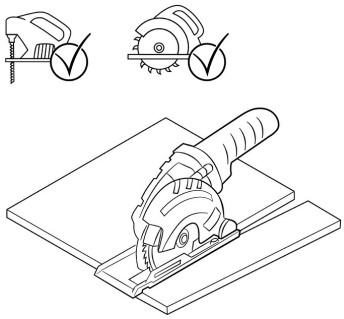

5 It is possible to cut two edges from a whole tile.

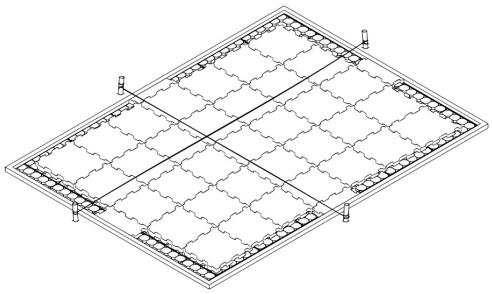

6 Lay borders - fill with soil.

